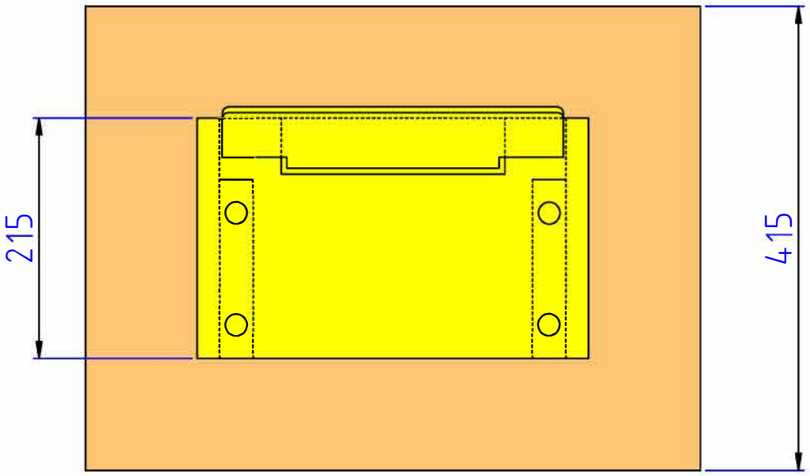

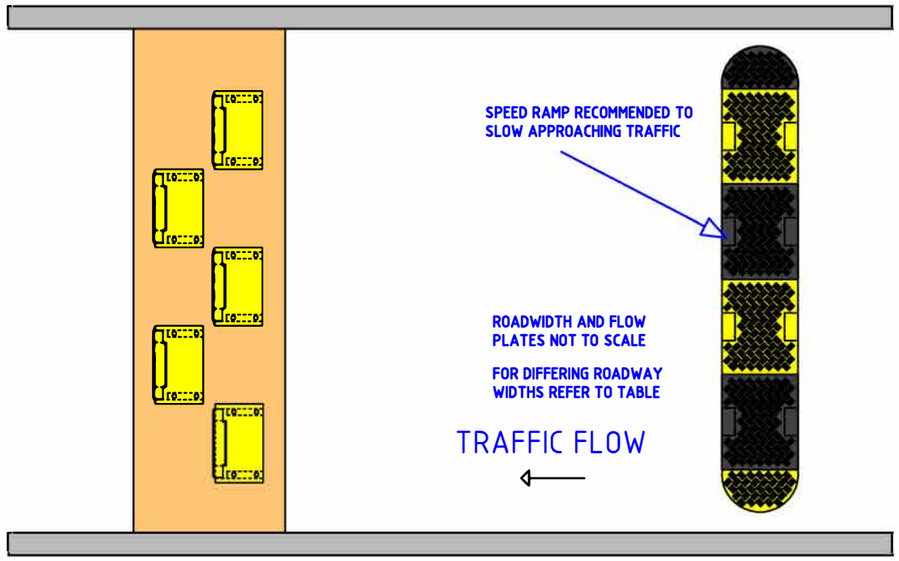

TRAFFIC FLOW CONTROL PLATES ARE DESIGNED TO ENCOURAGE ONE WAY TRAFFIC FLOW AND PREVENT UNAUTHORISED ENTRY/EXIT WITHIN ANY LOCATION.

MANUFACTURED FROM HEAVY STEEL PLATE, WITH NOISE REDUCTION BUFFERS TO ALLOW SMOOTH OPERATION.

AVAILABLE IN STANDARD YELLOW POWDER COATING.

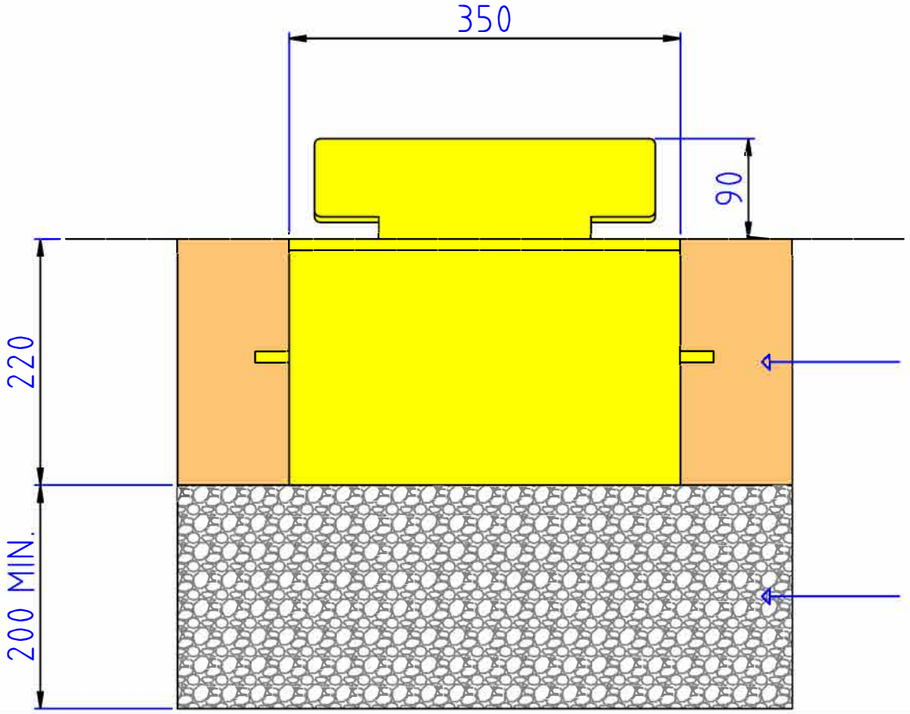

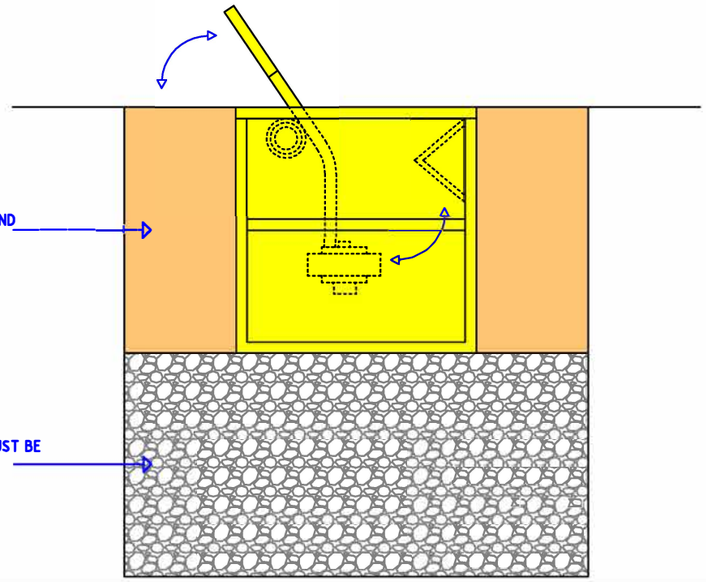

ROAD WIDTH METRIC (mm)	IMPERIAL (FEET)	NO. OF PLATES
2000	6.56'	5
2500	8.20'	6
3000	9.84'	7
3500	11.48'	9
4000	13.12'	10
4500	14.76'	11
5000	16.40'	13
5500	18.05'	14
6000	19.69'	15